ITEM	DESCRIPTION	MAT'L	QUANTY

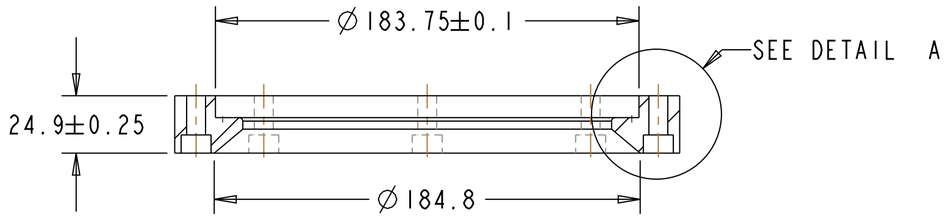

SECTION A-A

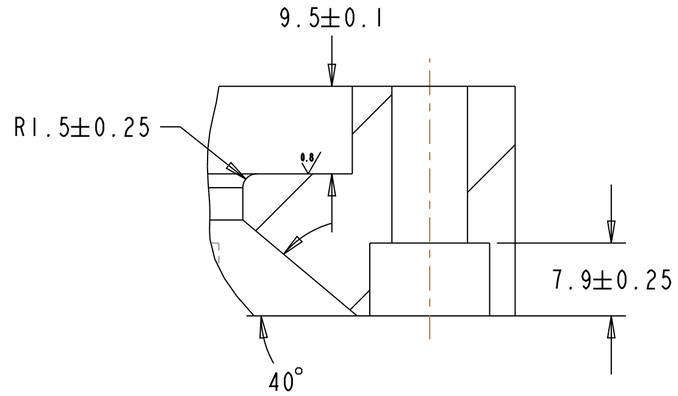

DETAIL A
SCALE 2.000

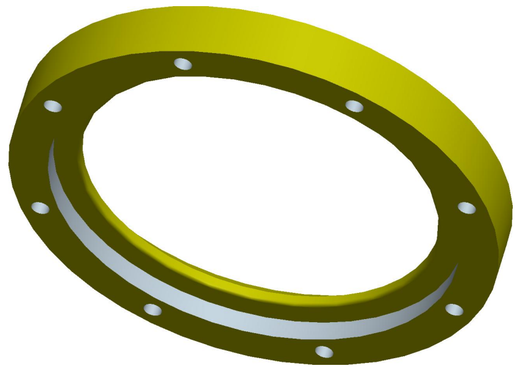

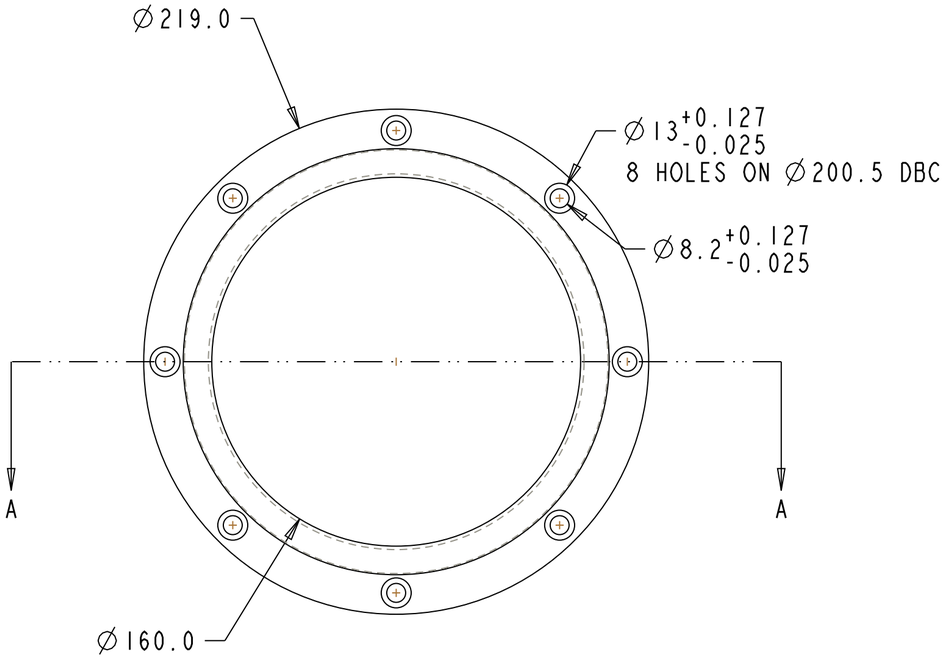

MATL: ALUM 6061-T6

NOTES:

1. Sealing surface must be free of burrs and scratches

	B		FIXED TOLERANCES/HOLES	
REF. DWGS.	REV.	DATE	REVISION	BY

ALL DIMENSIONS IN mm UNLESS OTHERWISE SPECIFIED
TOLERANCES UNLESS OTHERWISE SPECIFIED:
FRACTIONAL DIMENSIONS
DECIMAL DIMENSIONS XX ± 0.5
ANGULAR DIMENSIONS ± 0.5°
SURFACE FINISH 32um

UNIVERSITY OF ALBERTA
EDMONTON ALBERTA CANADA

DESIGNED CHRIS NG
DRAWN CHRIS NG
CHECKED
APPROVED

TELEPHONE: (780) 492 5979
FAX: (780) 492 3408
E-MAIL: cjng@ualberta.ca

CENTER OF PARTICLE PHYSICS

QUARTZ HOLDER

SCALE	APPROVAL	DWG. NO	REV.
0.500			
DATE APR 17, 2012	CHIEF ENG'R		B