ITEM	DESCRIPTION	MAT'L	QUANTY

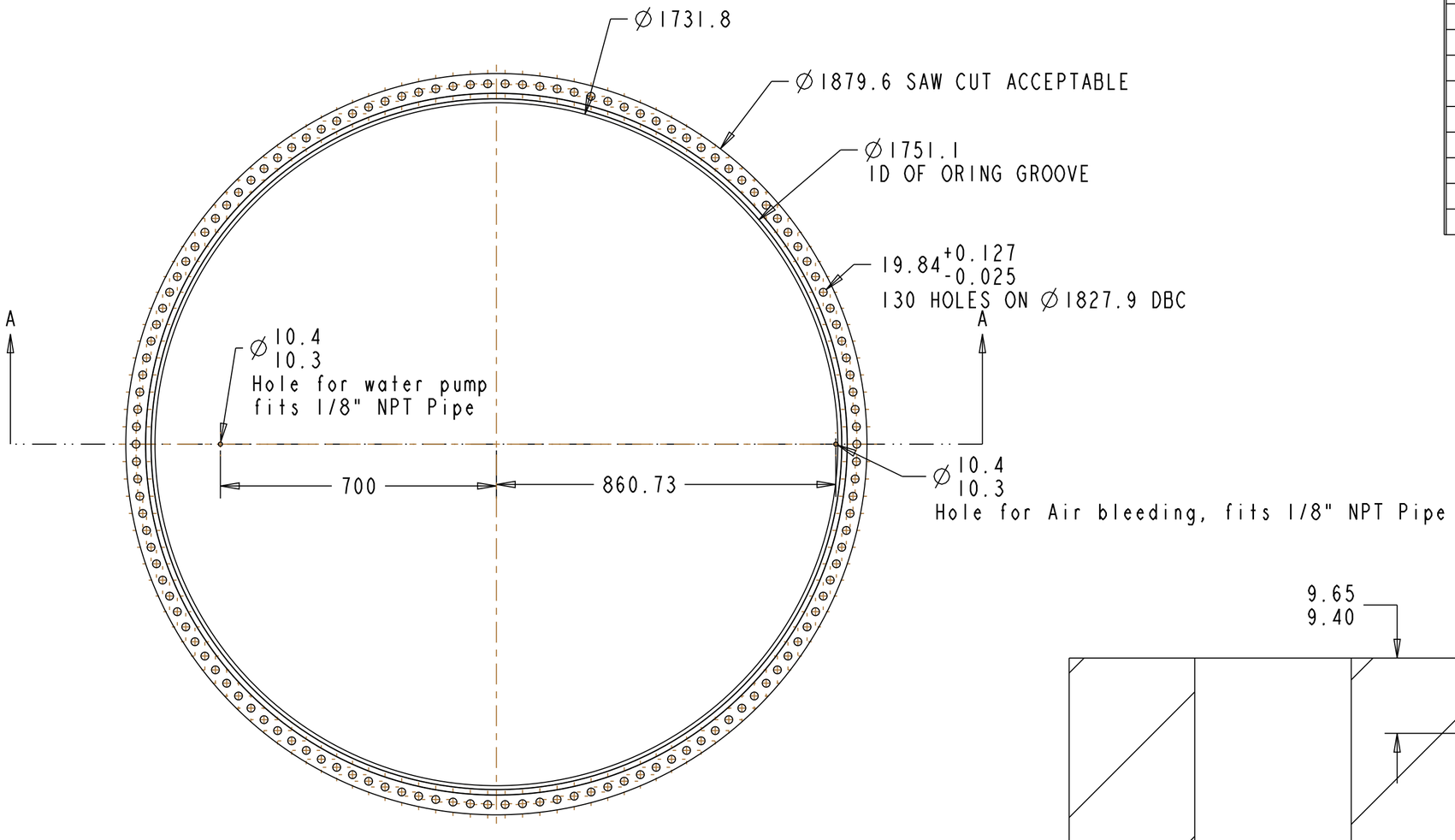

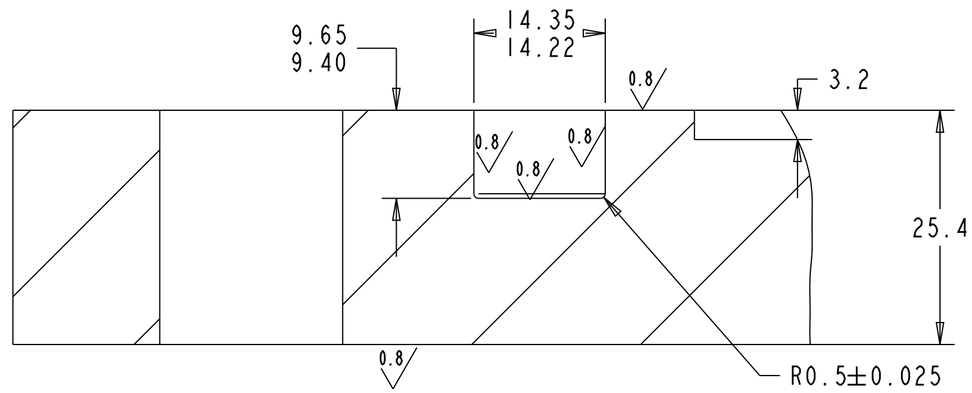

Only need this surface finish on the
outside 75mm of the bottom of the plate

DETAIL A
SCALE 2.000

SEE DETAIL A

SECTION A-A

MATL: 1" STEEL PLATE

	B		FIXED TOLERANCES	
REF. DWGS.	REV.	DATE	REVISION	BY

ALL DIMENSIONS IN mm UNLESS OTHERWISE SPECIFIED
TOLERANCES UNLESS OTHERWISE SPECIFIED:
FRACTIONAL DIMENSIONS
DECIMAL DIMENSIONS XX ± 0.5
ANGULAR DIMENSIONS ± 0.5°
SURFACE FINISH MILL FINISH

UNIVERSITY OF ALBERTA
EDMONTON ALBERTA CANADA

DESIGNED CHRIS NG
DRAWN CHRIS NG
CHECKED
APPROVED

TELEPHONE: (780) 492 5979
FAX: (780) 492 3408
E-MAIL: cjng@ualberta.ca

CENTER OF PARTICLE PHYSICS

HYDROFORMING PLATE

SCALE	APPROVAL	DWG. NO	REV.
0.100			
DATE APR 17,2012	CHIEF ENG'R		B