ITEM	DESCRIPTION	MAT'L	QUANTY
1	Quartz Window Assembly	ALUM	2
2	Gas Port Flange	ALUM	1
3	Craddle Bracket	ALUM	2
4	Quartz Window Assembly (Long)	ALUM	2
5	Crane Lifting Assembly	ALUM	2
6	Main Vessel Flange	ALUM	2
7	Main Vessel Cylinder	ALUM	1

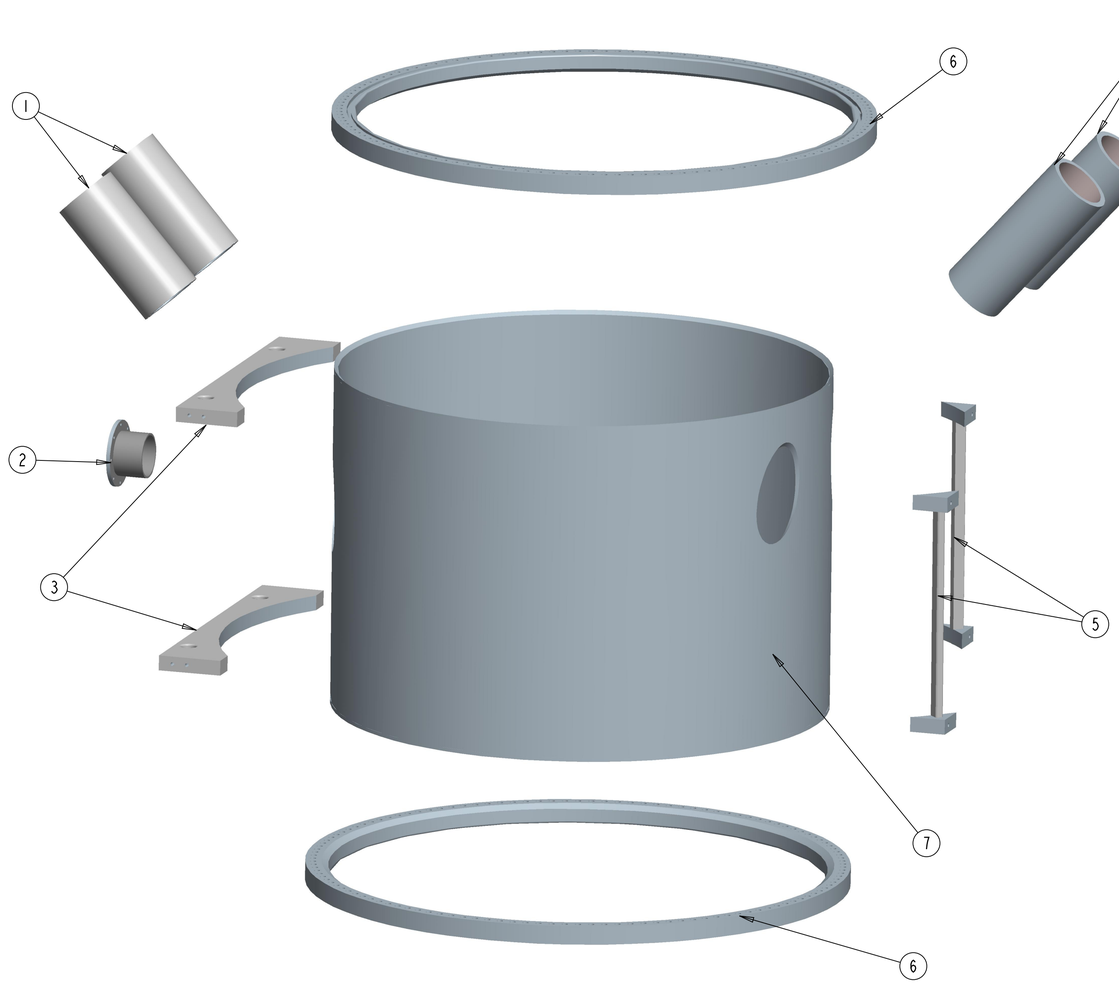

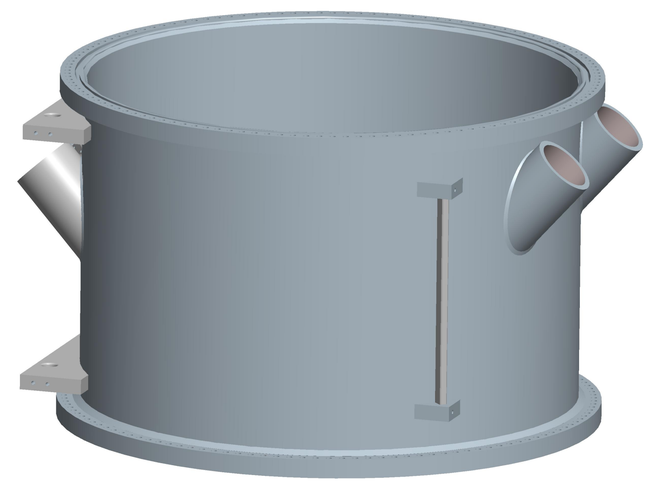

ALL DIMENSIONS IN mm UNLESS OTHERWISE SPECIFIED
TOLERANCES UNLESS OTHERWISE SPECIFIED:
FRACTIONAL DIMENSIONS
DECIMAL DIMENSIONS XX ± 0.5
ANGULAR DIMENSIONS ± 0.5°
SURFACE FINISH MILL FINISH

REF. DWGS.	REV.	DATE	REVISION	BY

UNIVERSITY OF ALBERTA
EDMONTON ALBERTA CANADA

DESIGNED CHRIS NG
DRAWN CHRIS NG
CHECKED
APPROVED

TELEPHONE: (780) 492 5979
FAX: (780) 492 3408
E-MAIL: cjng@ualberta.ca

CENTER OF PARTICLE PHYSICS

MAIN VESSEL ASSEMBLY EXPLODED

SCALE 0.100
APPROVAL
DWG. NO
REV. A
DATE MAR 1,2012
CHIEF ENG'R

ITEM	DESCRIPTION	MAT'L	QUANTY

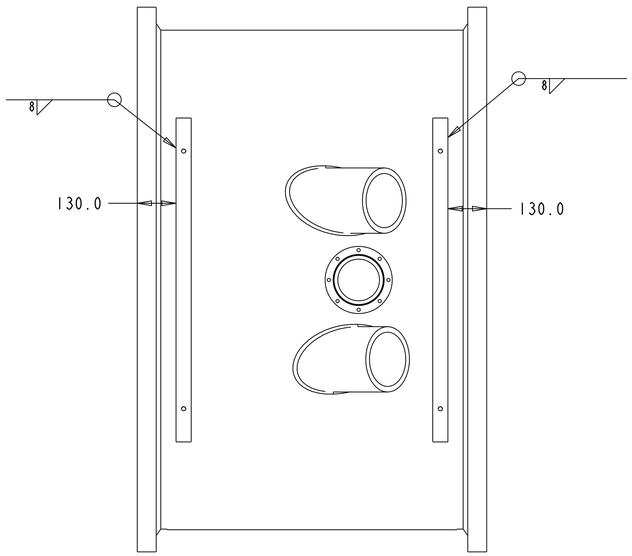

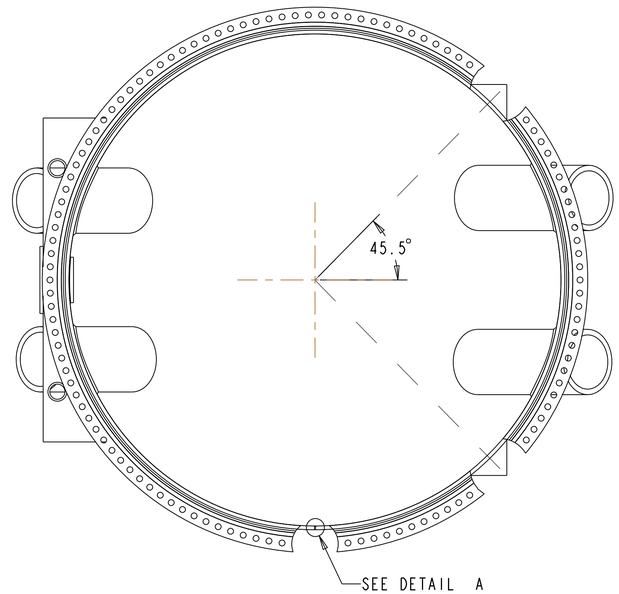

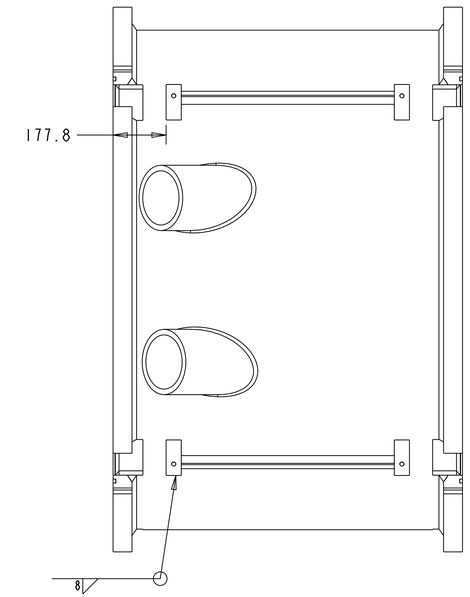

Fillet Welds around crane lifting assemblies

NOTES:

MAKE VESSEL OUT OF ONE 0.5" SHEET OF ALUMINUM 5052-H32

BEND INTO CYLINDRICAL SHAPE WITH OD=1674.6mm AND H=1135.4mm AND DOUBLE-V BUTT WELD END TOGETHER

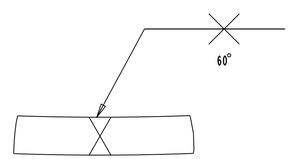

DETAIL A
SCALE 1.000

REF. DWGS.	REV.	DATE	REVISION	BY
	B		DECREASE DIAMETER	
	C		MATERIAL CHANGED	

ALL DIMENSIONS IN mm UNLESS OTHERWISE SPECIFIED
TOLERANCES UNLESS OTHERWISE SPECIFIED:
FRACTIONAL DIMENSIONS
DECIMAL DIMENSIONS XX ± 0.5
ANGULAR DIMENSIONS ± 0.5°
SURFACE FINISH MILL FINISH

UNIVERSITY OF ALBERTA
EDMONTON ALBERTA CANADA

DESIGNED CHRIS NG
DRAWN CHRIS NG
CHECKED
APPROVED

TELEPHONE: (780) 492 5979
FAX: (780) 492 3408
E-MAIL: cjng@ualberta.ca

CENTER OF PARTICLE PHYSICS

MAIN VESSEL ASSEMBLY
OUTSIDE WELDS AND CYLINDRICAL WELD

SCALE	APPROVAL	DWG. NO	REV.
0.100			C
DATE JULY 13,2012	CHIEF ENG'R		

ITEM	DESCRIPTION	MAT'L	QUANTY

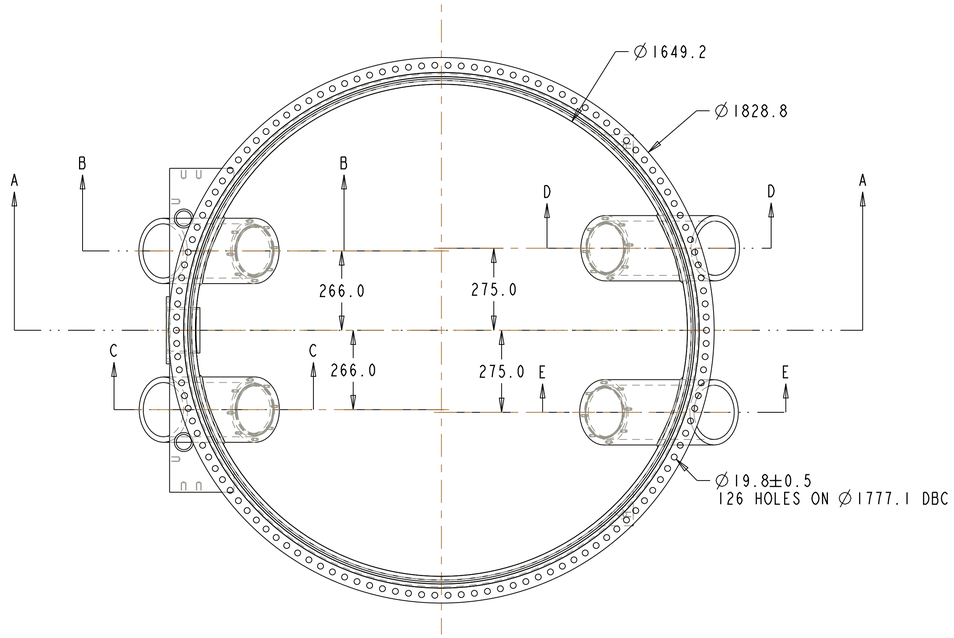

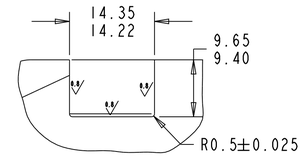

DETAIL D
SCALE 2.000

NOTE: NEED CUSTOM VITON ORING WITH Ø1700.3mm ID AND CROSS SECTION OF Ø12.7mm

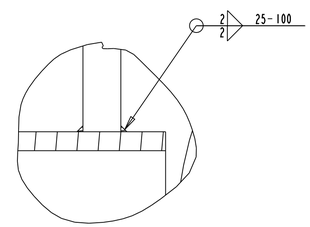

DETAIL B
SCALE 1.000

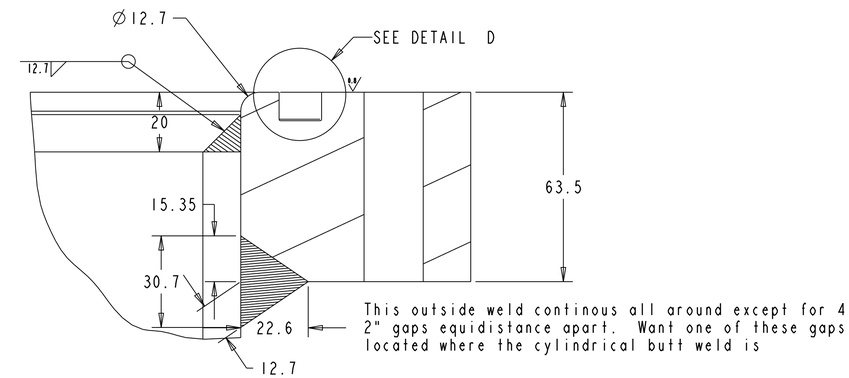

DETAIL C
WELD DETAIL
SCALE 1.000

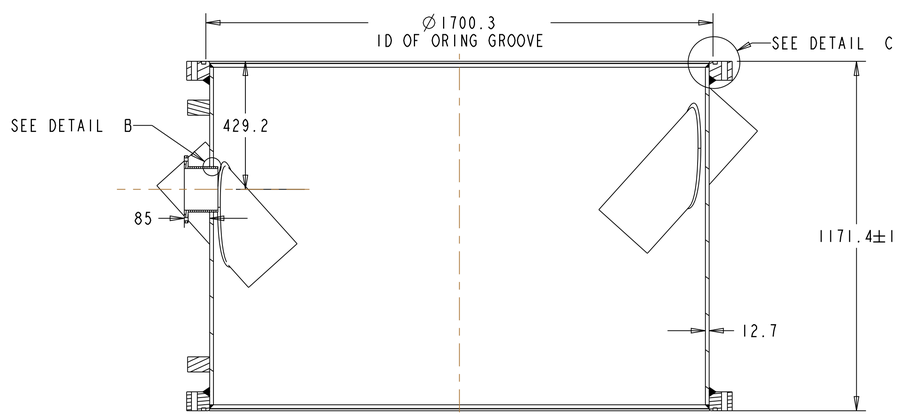

SECTION A-A

NOTE: FOR FLANGE MATERIALS USE ALUM 6061-T6

REF. DWGS.	REV.	DATE	REVISION	BY
	B		FIXED TOLERANCES	
	C		DECREASE DIAMETER	
	D		INCREASE HOLE TOLERANCE	
			CHANGED WELD DETAIL C	

ALL DIMENSIONS IN mm UNLESS OTHERWISE SPECIFIED
TOLERANCES UNLESS OTHERWISE SPECIFIED:
FRACTIONAL DIMENSIONS
DECIMAL DIMENSIONS XX ± 0.5
ANGULAR DIMENSIONS ± 0.5°
SURFACE FINISH MILL FINISH

UNIVERSITY OF ALBERTA
EDMONTON ALBERTA CANADA

DESIGNED CHRIS NG
DRAWN CHRIS NG
CHECKED
APPROVED

TELEPHONE: (780) 492 5979
FAX: (780) 492 3408
E-MAIL: cjng@ualberta.ca

CENTER OF PARTICLE PHYSICS

MAIN VESSEL ASSEMBLY

SCALE	APPROVAL	DWG. NO	REV.
0.100			D
DATE JULY 13,2012	CHIEF ENG'R		

ITEM	DESCRIPTION	MAT'L	QUANTY

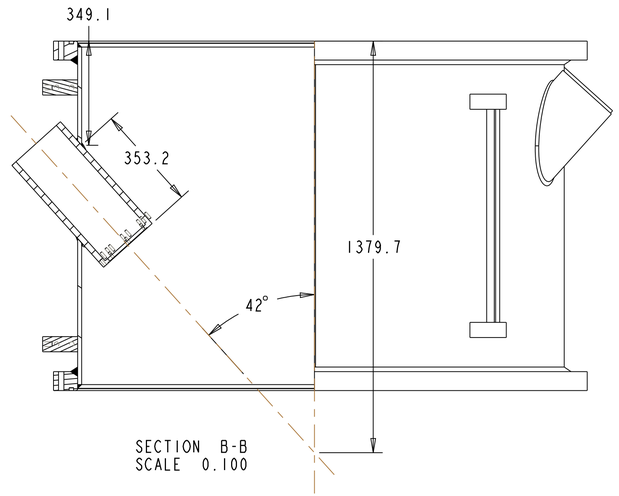

SECTION B-B
SCALE 0.100

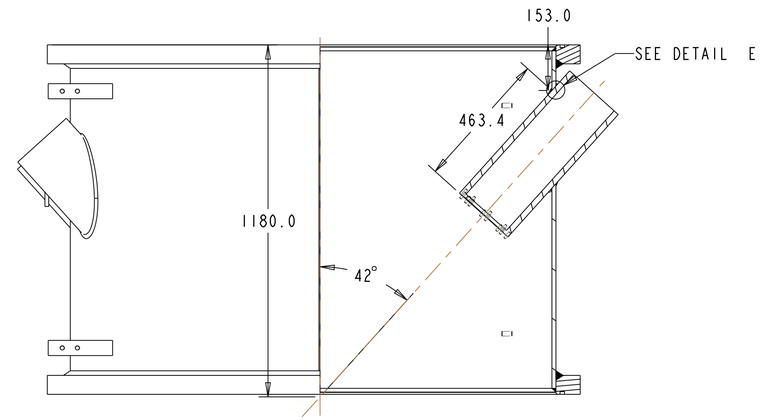

SECTION D-D
SCALE 0.100

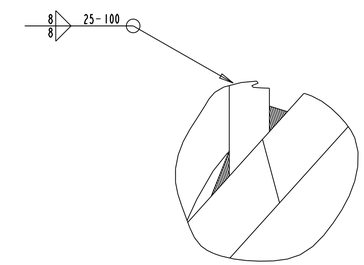

DETAIL E
SCALE 1.000

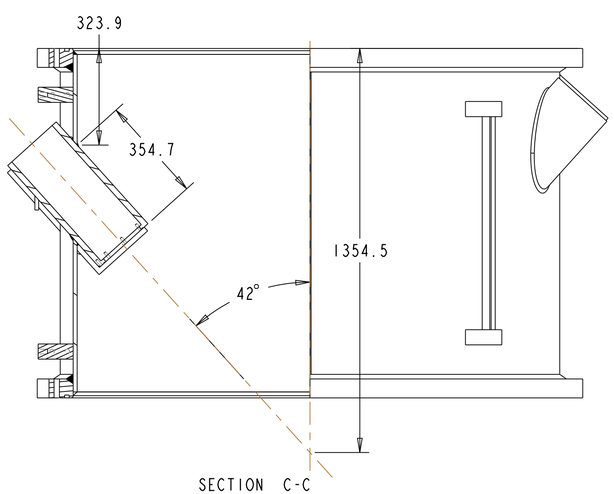

SECTION C-C
SCALE 0.100

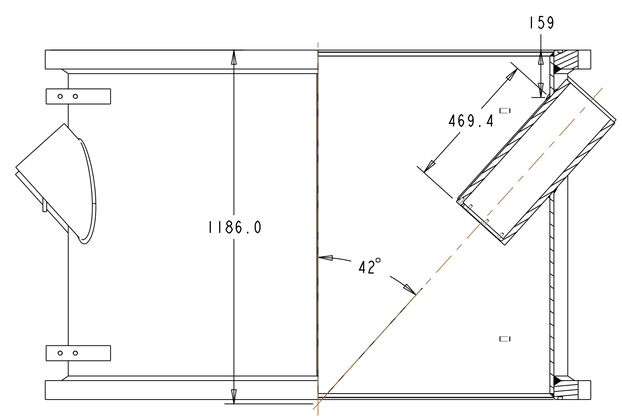

SECTION E-E
SCALE 0.100

ALL DIMENSIONS IN mm UNLESS OTHERWISE SPECIFIED
TOLERANCES UNLESS OTHERWISE SPECIFIED:
FRACTIONAL DIMENSIONS
DECIMAL DIMENSIONS XX ± 0.5
ANGULAR DIMENSIONS ± 0.5°
SURFACE FINISH MILL FINISH

REF. DWGS.	REV.	DATE	REVISION	BY
	B		DECREASE DIAMETER	

UNIVERSITY OF ALBERTA
EDMONTON ALBERTA CANADA

DESIGNED CHRIS NG
DRAWN CHRIS NG
CHECKED
APPROVED

TELEPHONE: (780) 492 5979
FAX: (780) 492 3408
E-MAIL: cjng@ualberta.ca

CENTER OF PARTICLE PHYSICS

MAIN VESSEL ASSEMBLY
QUARTZ WINDOW SLEEVE WELDS

SCALE	APPROVAL	DWG. NO	REV.
DATE MAY 10,2012	CHIEF ENG'R		B

ITEM	DESCRIPTION	MAT'L	QUANTY

NOTES:

1. CYLINDRICAL BODY SHALL BE MADE WITH CLEAN ROLLERS TO ELIMINATE ANY POSSIBILITY OF ANY INCLUSIONS BEING INTRODUCED INTO THE MATERIAL

2. WELDING SHALL CONFORM TO THE REQUIREMENTS OF CSA W59.2 OR AWS D1.2.

3. ALL WELDING TO BE DONE BY CONTRACTORS CERTIFIED UNDER A DIVISION 1 OR 2 FABRICATION SHOP IN ACCORDANCE WITH CSA W47.2. OR AWS D1.2.

4. ALL WELDS INSPECTED BY A LEVEL 3 INSPECTOR CERTIFIED IN ACCORDANCE WITH CSA W178.2-01 OR AWS CWI

5. ALL SEALING SURFACES MUST BE FREE OF NICKS/DENTS/SCRATCHES

6. DEGREASE ALL PARTS PRIOR TO WELDING

7. CYLINDRICAL BODY WELD SHOULD BE LOCATED APPROX 90 DEGREES FROM GAS PORT WELD

8. ALL INSIDE WELDS TO BE VACUUM TIGHT

9. FINISHED VESSEL TO BE VACUUM TIGHT.

10. FINISHED VESSEL TO BE DEGREASED & CLEANED FOLLOWED WITH ETHANOL OR METHANOL RINSE

11. PROVIDE BLANK-OFF FLANGES TO MATCH EACH FLANGE

12. EACH FLANGE TO BE CLAMPED WITH 126 3/4"-10 UNC 316 SS BOLTS WITH 316 SS WASHERS AND SILICON BRONZE NUTS. INSTALLATION TORQUE SHOULD BE 26 lbf-ft USING NUCLEAR NON-METALLIC HIGH TEMPERATURE ANTI-SEIZE COMPOUND

13. BOLTS/NUTS MUST HAVE MATERIAL TEST REPORTS OR A CERTIFICATE OF CONFORMANCE TO THE ASTM SPECIFICATIONS

14. SUPPLY O-RINGS FOR FLANGES AS INDICATED

15. VACUUM TEST PERFORMED AT THE VENDOR FACILITY WILL BE IN ACCORDANCE WITH ASME-V, ASNT-TCIA NON DESTRUCTIVE EXAMINATION CODE. LEAK TIGHTNESS SHOULD BE DEMONSTRATED BY RECORDING THE HELIUM MASS SPECTROMETER LEAK DETECTOR OUTPUT ON A CHART RECORD FOR A MINUMUN OF ONE HOUR. THE MAX LEAK RATE SHOULD NOT EXCEED 1x10e-8 mbar liter/sec

REF. DWGS.	REV.	DATE	REVISION	BY
	B		CORRECT NOTE 12	

ALL DIMENSIONS IN mm UNLESS OTHERWISE SPECIFIED
TOLERANCES UNLESS OTHERWISE SPECIFIED:
FRACTIONAL DIMENSIONS
DECIMAL DIMENSIONS XX ± 0.5
ANGULAR DIMENSIONS ± 0.5°
SURFACE FINISH MILL FINISH

UNIVERSITY OF ALBERTA
EDMONTON ALBERTA CANADA

DESIGNED CHRIS NG
DRAWN CHRIS NG
CHECKED
APPROVED

TELEPHONE: (780) 492 5979
FAX: (780) 492 3408
E-MAIL: cjng@ualberta.ca

CENTER OF PARTICLE PHYSICS

MAIN VESSEL ASSEMBLY NOTES

SCALE	APPROVAL	DWG. NO	REV.
DATE MAY 10, 2012	CHIEF ENG'R		B

ITEM	DESCRIPTION	MAT'L	QUANTY
1	Quartz Window Assembly	ALUM	2
2	Gas Port Flange	ALUM	1
3	Craddle Bracket	ALUM	2
4	Quartz Window Assembly (Long)	ALUM	2
5	Crane Lifting Assembly	ALUM	2
6	Main Vessel Flange	ALUM	2
7	Main Vessel Cylinder	ALUM	1
8	Hydroformed Window	ALUM	2
9	Window Clamp	ALUM	2
10	Gas Port Blank Off	ALUM	1
11	Quartz Window	QUARTZ	4
12	Quartz Holder	ALUM	4

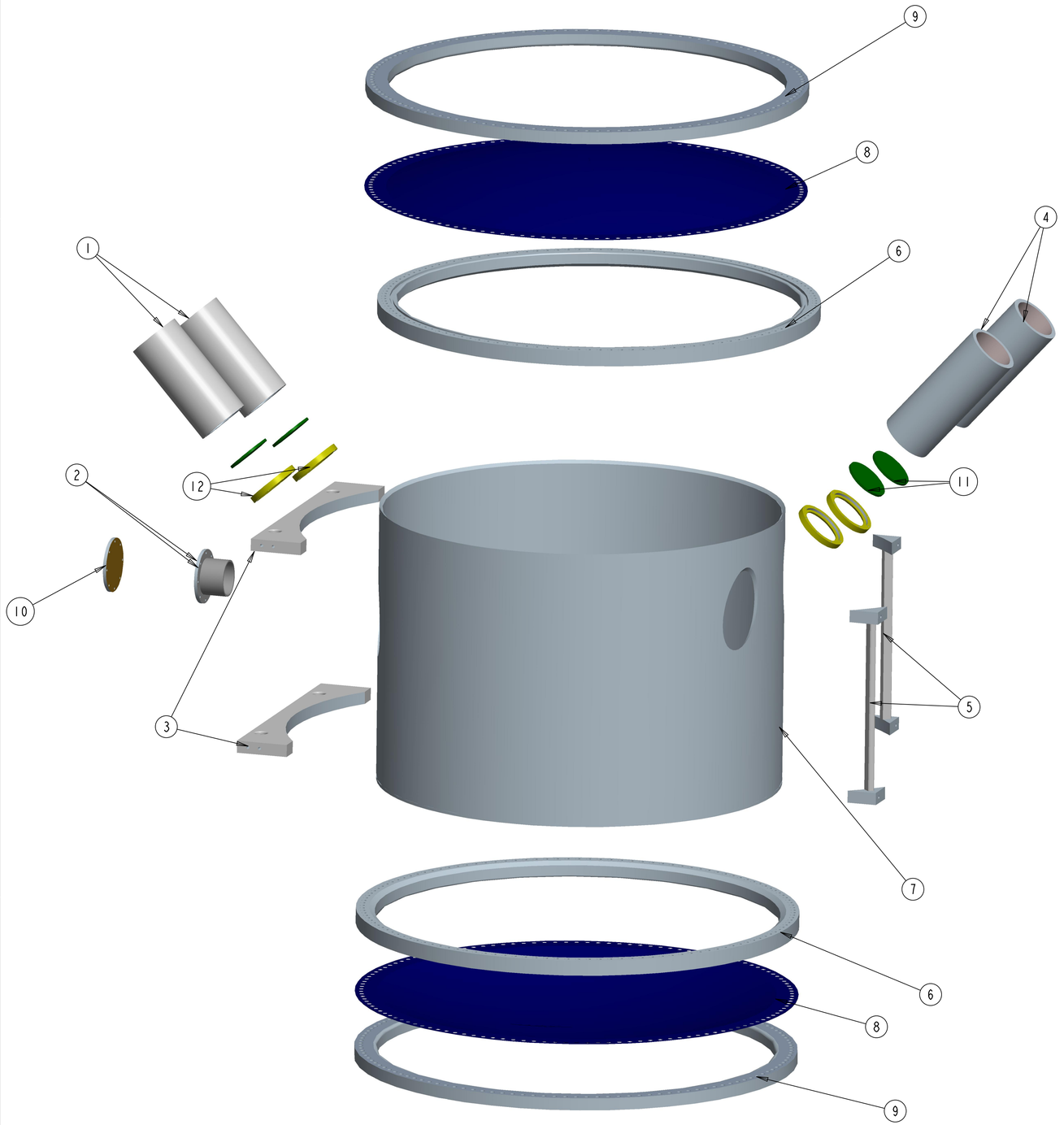

ALL DIMENSIONS IN mm UNLESS OTHERWISE SPECIFIED
TOLERANCES UNLESS OTHERWISE SPECIFIED:
FRACTIONAL DIMENSIONS
DECIMAL DIMENSIONS XX ± 0.5
ANGULAR DIMENSIONS ± 0.5°
SURFACE FINISH MILL FINISH

REF. DWGS.	REV.	DATE	REVISION	BY

UNIVERSITY OF ALBERTA
EDMONTON ALBERTA CANADA

DESIGNED CHRIS NG
DRAWN CHRIS NG
CHECKED
APPROVED

TELEPHONE: (780) 492 5979
FAX: (780) 492 3408
E-MAIL: cjng@phys.ualberta.ca

CENTER OF PARTICLE PHYSICS

CHERENKOV VESSEL ASSEMBLY
EXPLODED

SCALE 0.100
APPROVAL
DWG. NO
REV. A
DATE MAR 1,2012
CHIEF ENG'R

ITEM	DESCRIPTION	MAT'L	QUANTY
1	Quartz Window Assembly	ALUM	2
2	Gas Port Flange	ALUM	1
3	Craddle Bracket	ALUM	2
4	Quartz Window Assembly (Long)	ALUM	2
5	Crane Lifting Assembly	ALUM	2
6	Main Vessel Flange	ALUM	2
7	Main Vessel Cylinder	ALUM	1
8	Window Blank Off	STEEL	1
9	Hydroforming Plate	STEEL	1
10	Quartz Window Blank Off	STEEL	4
11	Gas Port Plate	ALUM	1
12	Window Clamp	ALUM	1

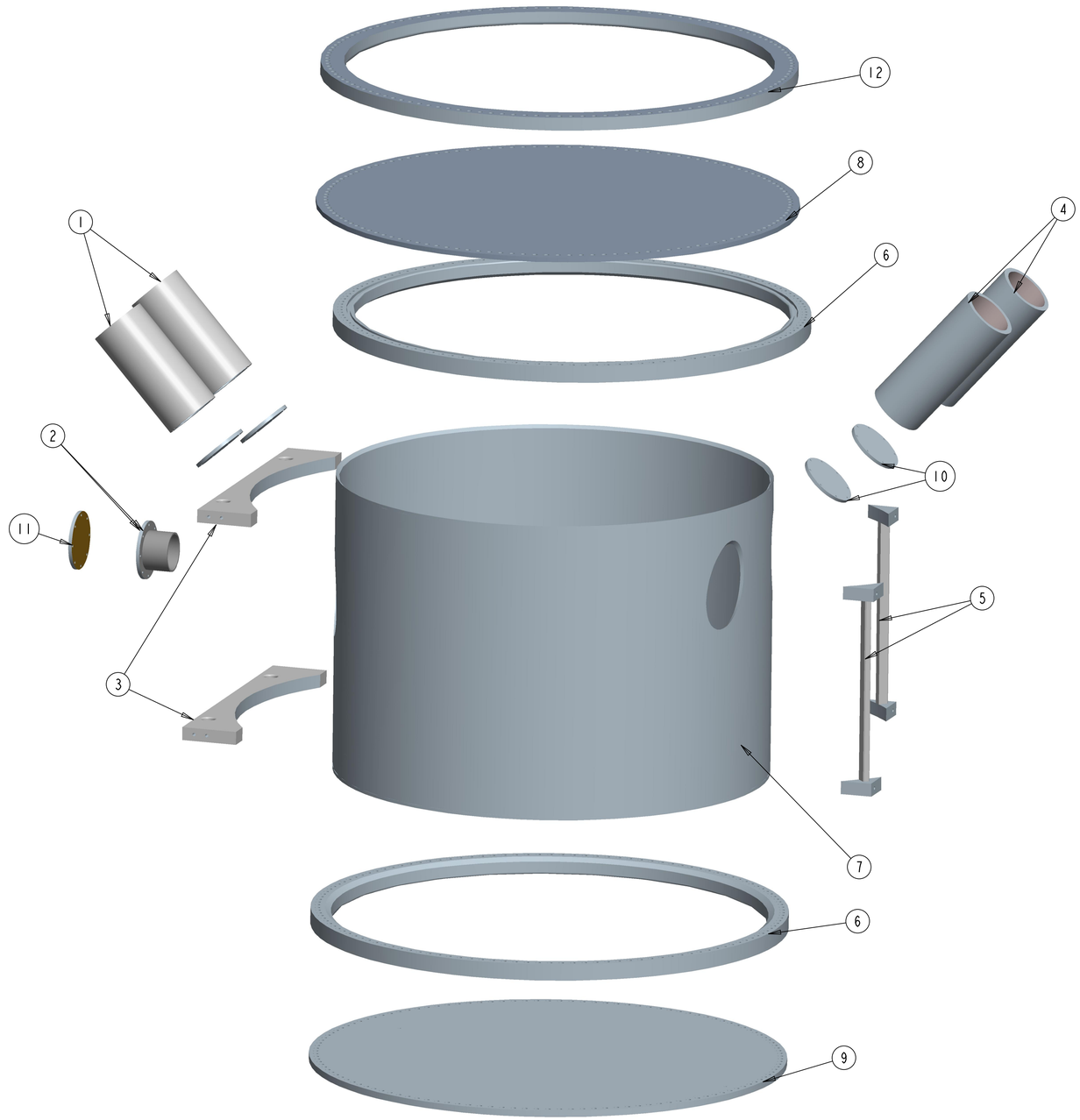

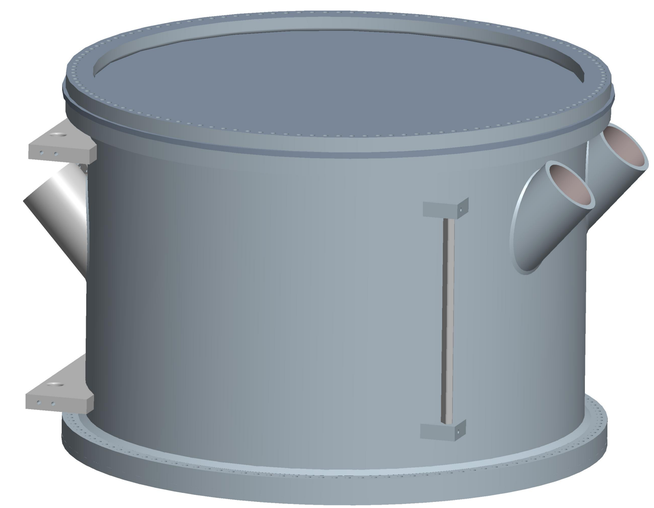

ALL DIMENSIONS IN mm UNLESS OTHERWISE SPECIFIED
TOLERANCES UNLESS OTHERWISE SPECIFIED:
FRACTIONAL DIMENSIONS
DECIMAL DIMENSIONS XX ± 0.5
ANGULAR DIMENSIONS ± 0.5°
SURFACE FINISH MILL FINISH

REF. DWGS.	REV.	DATE	REVISION	BY

UNIVERSITY OF ALBERTA
EDMONTON ALBERTA CANADA

DESIGNED CHRIS NG
DRAWN CHRIS NG
CHECKED
APPROVED

TELEPHONE: (780) 492 5979
FAX: (780) 492 3408
E-MAIL: cjng@phys.ualberta.ca

CENTER OF PARTICLE PHYSICS

CHERENKOV VESSEL ASSEMBLY VACUUM TEST
EXPLODED

SCALE	APPROVAL	DWG. NO	REV.
0.100			A
DATE MAR 5,2012	CHIEF ENG'R		